SDS 9 TECHNICAL DESCRIPTION

Overall Description

The SDS 9 is a 6 channel synthesizer consisting of bass, snare, rim and three tom toms and is housed in a metal enclosure measuring 290 x 350 x 73mm (including knobs).

The 6 channels can be 'triggered' by one of three methods:

1. An audio spike of approximately 1-5v which is normally supplied by striking the appropriate drum pad.

2. A positive going control voltage or gate of 3 - 15v fed via the sequence input socket.

3. By Midi control signals.

The drum pad signals are fed via jack sockets to the channel sensitivity controls. (CH2 is stereo jack) and carries triggers for snare and rim. An 8 pin din. allows gate and cv trigger signals to bypass the sensitivity controls and trigger the channels directly.

Two 8 pin din sockets are provided to carry Midi in and out information (5 pin plugs will plug directly into these sockets).

Methods of Synthesis

Bass Drum

Separate recordings of a bass drum click (i.e. the beater hitting the drum) and thump (the main body of the sound) are stored in the computer's main machine program. When the bass channel is triggered the 'click' and thump portions of the sound are joined together to form the complete bass drum sound.

Because the two sounds are separate, they both can be manipulated to produce different bass drum sounds. The controls are:- click-pitch, length and volume. Thump-pitch and length.

These parameters can be changed by the user and stored away in the computer's memory and are recalled every time the bass drum is struck.

The output volume of the bass drum is controlled by the incoming trigger level, i.e. low volume for a low trigger, high volume for a large trigger. These triggers are scaled by two curves. One for the click and one for the thump. This means that there is more thump at lower volumes that at higher volumes.

This makes up for the ears' lack of bass perception at lower volumes and is essential so that the click signal does not overpower at low trigger levels.

SOFTWARE FLOW CHART FOR BASS DRUM

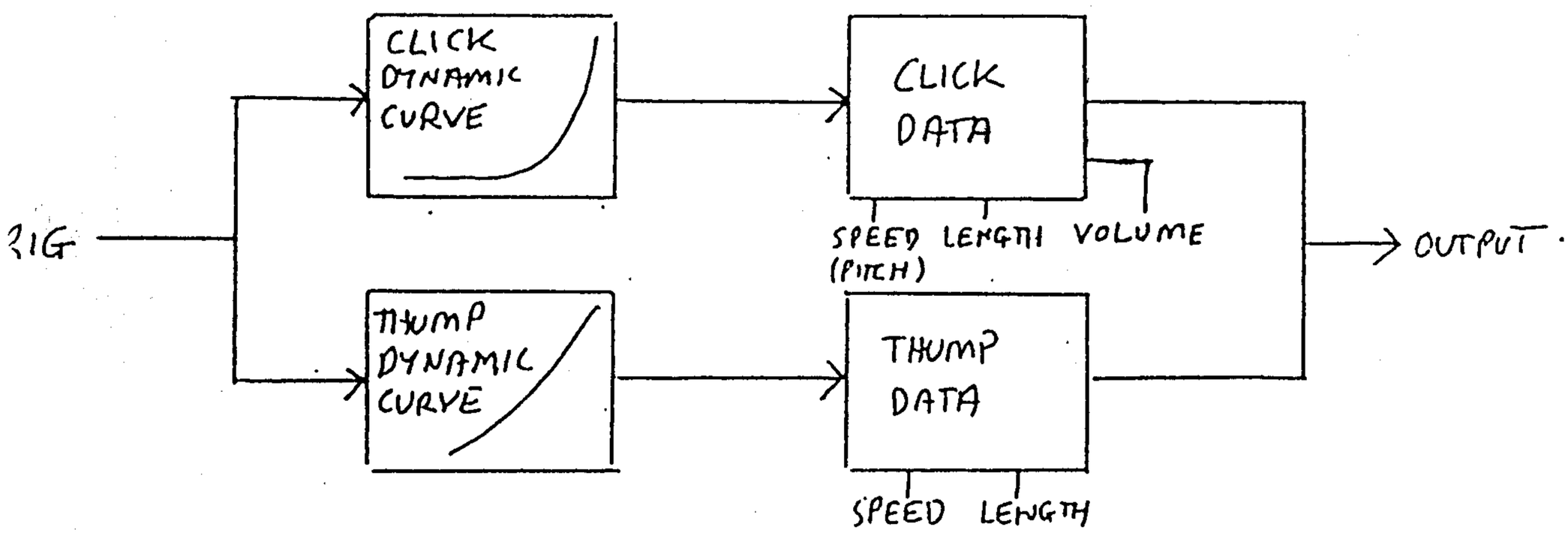

The bass drum signal appears directly at the computer multiplex outputs IC.35 Pin.7 and is 4v P-P at maximum trigger (2.5v quiescent). A second control signal for the bass drum appears at IC.35 Pin.8, this signal is normally high (+4v) but goes low (ov) for the period of the bass drum click.

The bass drum signal is fed into a switchable low-pass filter consisting of TR.19 and C.50.

The filter control signal is used to switch out the filter during the high frequency click portion of the bass drum sound and in, during the low frequency thump portion of the sound. This is to ensure that multiplex noise is eliminated from the bass drum thump.

The composite/filtered bass drum signal is fed into a top boost/low boost audio filter consisting of IC.17 A + D.

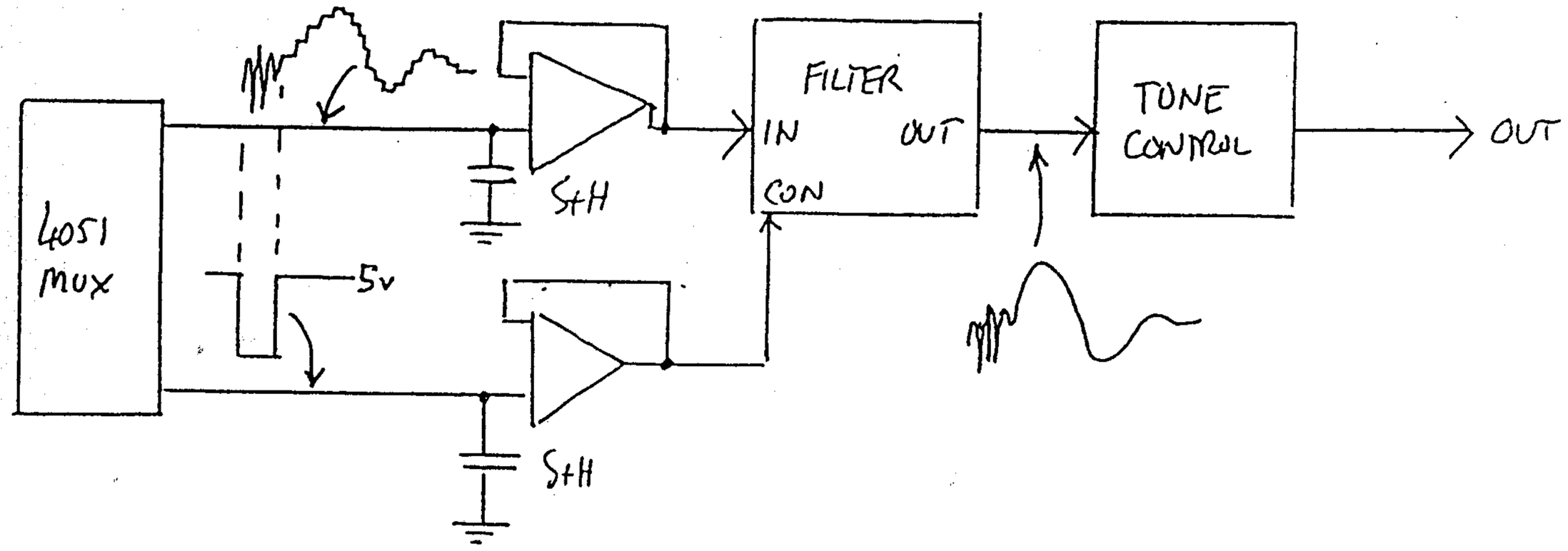

Snare Drum

The snare drum consists of 4 separate sound sources, controlled by two trigger signals.

The four sources are programmed and triggered to produce the effect of one drum consisting of two separate but mixable parts. The main snare sound and a rim sound.

The four sound sources are 3 proms (can be 27128 or 2764), one is permanently assigned to CH2 (snare) and the other two are assigned under program control to the rim(CH3) and a white noise generator.

The snare and rim combination, although separate channels, should be treated as one channel, the audio signals are summed at the input of a final VCA and form a composite 'snare drum' (although the raw unfiltered rim signal is available separately).

There are twelve controls that are used to set the program parameters for the snare drum.

These are:-

Snare pitch – Sets the cycle time for the snare prom.

Snare bend – The snare pitch can be sharpened or flattened, according to how hard the snare has been struck.

Snare decay – Sets the length of the snare sample (note - this can never be longer than the length of the sample stored in prom).

Filter pitch – Sets the cut-off frequency of the snare filter (affects both snare/rim and noise).

Filter sweep – Varies the filter frequency according to how hard the snare or rim have been struck.

Filter resonance – Adds an emphasis at the cut off frequency.

Noise – Adds white noise to the snare.

Rim pitch – Sets the cycle time and hence the pitch of the rim clock.

Rim bend – The pitch of the rim can be sharpened or flattened, depending on how hard the rim has been hit.

Rim decay – Sets the decay length of the rim. (Note: - can only be shorter than the rim sample).

Rim A-B prom selects – Routes either prom A or prom B to the rim.

Snare-Rim balance – Sets the relative audio levels of the snare and rim. (Note: during playing, the relative volumes of snare and rim are proportional to how hard they have been struck).

SNARE/RIM CLOCK CIRCUITRY

The snare and rim have similar circuits, this description refers to the snare circuit. The relevant components for the rim are in brackets.

IC.21 A+B (IC.21 B+C) and associate resistors from a voltage controlled oscillator with a frequency that can be varied from 5KHz to 35KHz., by applying a positive control voltage to the junction of R.214 + R.215 (R.221 + R.222).

ne four sound sourc
o CH2 (snare) and the
white noise generator.

he snare and rim combination, although
hannel, the audio signals are summed at the input of a final VCA and form a composite
snare drum' (although the raw unfiltered rim signal is available separately).

ere are twelve controls that are used to set the program parameters for the

iese are:-

nare pitch	–	Sets the cycle time for the snare prom.
nare bend	–	The snare pitch tan be sharpened or flattened, according to how hard the snare has been struck.
nare decay	–	Sets the length of the snare sample (note - this can never be longer than the length of the sample stored in prom).
ilter pitch	–	Sets the cut-off frequency of the snare filter (affects both snare/rim and noise).
ilter sweep	–	Varies the filter frequency according to how hard the snare or rim have been struck.
ilter resonance	–	Adds an emphasis at the cut off frequency.
oise	–	Adds white noise to the snare.
im pitch	–	Sets the cycle time and hence the pitch of the rim clock.
im bend	–	The pitch of the rim can be sharpened or flattened, depending on how hard the rim has been hit.
im decay	–	Sets the decay length of the rim. (Note: - can only be shorter than the rim sample).
im A-B prom selects	–	Routes either prom A or prom B to the rim.
nare-Rim balance	–	Sets the relative audio levels of the snare and rim. (Note: during playing, the relative volumes of snare and rim are proportional to how hard they have been struck).

SNARE/RIM CLOCK CIRCUITRY

The snare and rim have similar circuits, this description refers to the snare circuit. The relevant components for the rim are in brackets.

IC.21 A+B (IC.21 B+C) and associate resistors from a voltage controlled oscillator with a frequency that can be varied from 5KHz to 35KHz., by applying a positive control voltage to the junction of R.214 + R.215 (R.221 + R.222).

TOM TOMS (TOM 1 DESCRIBED).

The SDS 9 Tom toms are produced by three identical circuits consisting of a Curtis 3394, modulation oscillator IC.2 B+C and various control and sweep amplifiers.

All three tom toms are identical except for the VCO timing capacitors C.84/92/100 which set the tom toms at different pitches. (Tom 1 being the highest pitch, Tom 3, the lowest).

The 3394 is a single synthesizer voice containing a VCO, VCF, VCA and input mixing controls. Manufacturers details are enclosed with this manual.

The variable controls for each tom tom are as follows:- Tom pitch, bend up/down, decay time, filter pitch, filter sweep, VCO modulation (2nd skin - applies collectively to all three tom toms) and click amount.

The click envelope generator is derived from the main trigger pulses and is fixed in length by C.9 + R.16 (Tom 1). This envelope is used to gate (IC.39 A) noise into the click amount amplifier (IC.39 B - Tom 1), whose control is derived from IC.7 C. The resultant burst of noise (click) is fed into the filter via C.86 to Pin.12 IC.36.

Timing for the VCO is set by C.84 and R.109. Pitch control is derived as with the snare and rim clocks, by summing positive and negative bend signals, pitch CV and modulation (if 2nd skin switched in) on the VCO frequency Pin.2. Pitch CV is derived from IC.7 A, the tom tom envelope is permanently connected to the VCO frequency control via R.96, this signal is cancelled when the bend amount CV (from IC.7 B) is half way, as this lets a negative version of the envelope through IC.42 to cancel the signal. As the bend CV is increased further, the negative envelope signal takes over, producing the bend up effect.

Noise is fed into the 3394 on Pin.9, and is internally mixed with the VCO triangle wave in proportion to the noise/tone CV from IC.8 B.

Filter sweep amount is controlled by IC.42 B and is sweep down, i.e., the filter is opened when the drum is struck and closes in proportion to the tom tom envelope, this control is mixed with the filter cut-off control voltage from IC.7 D on Pin.16 IC.36. The output of the filter is connected internally to the input of the final VCA, the output of which is buffered by IC.34 D. The via is controlled by the envelope generator.

COMPUTER

The computer in the SDS 9 is based around a 8031 micro controller. The 8031 is a rom-less version of the 8051. It has on-board uart, timers, port, ram and clock circuitry and runs at 12 MHz. (Manufacturers descriptions are enclosed with this manual). The machine program is stored in a 16K prom (27128) IC.47 and user program area is provided by a battery backed 2K byte ram (6116) IC.48.

The 8031 has a shared lower address/data buss. The lower addresses are latched by IC.57, the output of which, along with the processor's port 2, provide the 16 address lines.

The highest three address lines are decoded by IC.70 and provide the address locations for the different computer functions:- The 8255 port, A - D, D - A, and prom.

The prom is output by $\overline{OE}$ going low, this is controlled by the 8031 $\overline{PSEN}$ Pin. The ram is selected by the 8031 $\overline{WR}$ and $\overline{RD}$ lines, provision has been made to increase ram size to 8K bytes with link 3.

The ram power-up and chip select is controlled by IC.62, which is powered along with the ram, by the 3.6v nicad battery during stand by.

...ree control voltages are summed at the
(0 - 4v) a positive going envelope waveform (bend down) and a negative going envelope ... up) when the negative and positive envelopes cancel, a condition of ...

NOTE: - The positive bend signal is fixed and the negative envelope is ... IC.30 B), whose control voltage comes from IC.11, D, (IC.12, B).

At 2.5v control, the negative envelope cancels the positive envelope.

The snare VCO produces a square wave on IC.21 B. Pin.7 (IC.21 D, Pin.14) and ... binary counters IC.23 and IC.24 (IC.27 and IC.28).

The reset lines are normally low and the highest address line is high. This high ... is fed via D.72/71 and S1 (S.1 and IC.22) to disable the snare counter.

When the snare is struck, the re-set line goes high momentarily, the high address line goes low as the counters are re-set. This enables the clock, and the counters count from Ø sequentially through the entire address space of the prom (16K bytes or 8K bytes dependant upon the setting of S1).

When the highest address is reached, the clock is disabled and the count stops. The ...rom the snare prom IC.25 (IC.29/IC.30) is fed into a multiplying D-A IC.26, (IC.31), the multiply voltage is derived from the pad dynamic value.

The rim has two proms IC.29 and IC.30 (marked rim A and rim B) which are enabled by the prom select line (from IC.12 C) going high or low (low = IC.29 rim A. high = IC.30 rim B).

The rim and snare signals are fed into a Curtis 3372 filter/VCA. (Rim into input A, snare into input B). These inputs A + B have a gain control marked A + B, these are differentially driven by the snare/rim balance control voltage from IC.13 C. When the control is high (+5v), snare signal only will be produced, when low (OV), only the rim signal is produced.

Noise is also fed via its control amplifier (IC.32 A on to the B (snare input) thus the user can add white noise to the snare sound if required.

SNARE FILTER (IC.33).

The Curtis 3372 contains a low pass voltage controlled filter that has three control lines, filter cut-off pitch, cut-off sweep, (controlled by the rim/snare envelopes) and resonance.

The amount of sweep is controlled by amplifier IC.32 B, whose control voltage is derived from IC.13 B. The sweep signal appears on Pin.9 of IC.32 B (dependant upon amount) and is mixed with the filter pitch control voltage (derived from IC.13 A) on Pin.15. The output of the filter appears at Pin.1 and is fed to the final VCA via C.82, R.257. The final VCA output is buffered by IC.34 B, the control for which is the sum of the rim and snare envelopes.

This arrangement serves as an 'accent' when both rim and snare are struck together.

‘KRUPTS

All timing functions including D - A, A - D, auto demonstrate etc., are clocked from the 1 KHz interrupt timer IC.1. This timer should be 1KHz 5% or significant timing errors may be noticed. The pulse must be low for at least 1.2 ms to guarantee processor interrupt acknowledge.

MIDI AND TAPE

Midi out is generated by the 8031's uart on Pin.11, and received on Pin.10. An FSK code at 1.2 and 2.4 KHz is generated on the same uart pin for dumping of user program variables to cassette. Signals from the cassette are shaped on the in/out board and amplified by IC.35. The resultant square wave is fed into the 8031 uart on Pin.10.

NOTE: The tape input is disabled via D.77 unless in tape load or check mode.

Levels set for recording are suitable for mike inputs on most domestic cassette recorders. The output from the tape to the SDS 9 is expected to be from a tape earpiece or headphone socket.

DECAY CONTROLS

A sawtooth wave of 1KHz is derived from the 1KHz timer IC.1, and appears on IC.2 A Pin.2. This sawtooth is fed into five comparators IC.2 D and IC.3. These comparators control the decay of the five envelope generators for snare, rim, tom 1 - 3. The other input of the comparators is a control voltage from the function values sample and holds. The output of the comparator is a pulse at 1 KHz whose pulse width is proportional to the control voltage.

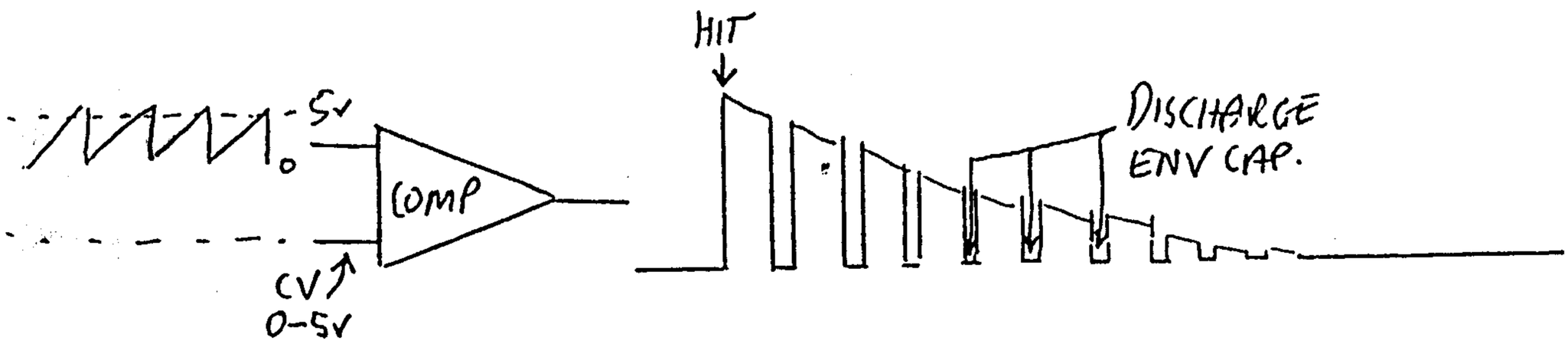

When a drum is hit the computer outputs a proportional pulse to the click i.e., IC.4A for Tom 1. The output of IC.4 A is used to charge envelope capacitor C.8 via D.50.

C.8 then discharges via R.9 when the output of capacitor IC.2 is low. The speed at which it discharges is proportional to the mark space ratio of the pulse appearing on IC.2 Pin.13. (The output of the comparator is open collector, so when it is high it cannot pump C.8 high again.

The signal on C.8 is buffered by IC.4 B whose output is Tom 1 envelope.

NOISE GENERATOR

Noise is created by reverse - biasing an NPN transistor TR.20. The thermal noise generated is amplified by IC.18. The gain of which is set by RV.21. The twisted wires on Pin.1 to8 from a small variable capacitance which should be twisted to prevent high frequency oscillation.

RV.21 should be set to produce 2.5v P - P noise at Pin IC.18. TR.20 should be selected for wide band noise.

POWER-UP

During power-up,
R.279. C.117 takes
passed.

During power-down, the unregulated
C.117 discharges quickly through D..
rail has decayed.

IC.45 is a programmable peripheral interface with two ports programmed as
one as inputs. Prog. CH.1 - CH.6, Midi and prog. led's are driven from po
segment display from port B and the 8 function buttons are connected to port C.

IC.59 is an 8 bit latch and is driven from the data buss to light the CH.1 trig
to switch off the second skin oscillator and disable the cassette input. It also drive
library led's D.20 - 23 which will be required if an 8K byte ram is fitted.

CONTROL VOLTAGE GENERATION

Values for various control functions are stored either in prom, ram or generated
8031. These values are latched into the D - A IC.60, which outputs an analog voltage
which is proportional to the value. This voltage is amplified and buffered by IC.53 B
and fed to the input of a 40-way analog multiplexer consisting of 5 x 4051 (IC.64 - 68)
and associated decoding logic IC.61, IC.63, IC.56, IC.58. The outputs of the 4051's
are fed to sample and hold circuits consisting of TLO.84 OP amps and capacitors (IC.
IC.13. C.21 - 48).

The output of the fet OP amps are the control voltages for the various analog fu
and are listed on the interface circuit diagram. The bass drum signal appears on SH
IC.35 Pin.7, and its associated filter control on IC.35 Pin.8 - See bass drum.

Of the forty sample and holds, the five triggers (snare, rim, tom 1 - 3), are updated
every 7 ms, the two for the bass drum are asynchronus and the other 33 are updated every
33 ms.

COMPUTER INPUTS - ANALOG

There are thirteen analog inputs to the computer. Six triggers which come from the
trigger sample and holds and seven function values which come from the seven program
parameter controls (RV.1 - 7).

IC.50 is a 16 input analog de-multiplexer, addressed by latch IC.51. Its output is
buffered by IC.53 A and fed via R.272 to IC.54 A - D, which converts the analog voltage
to a digital code.

IC.49, C.113, R.271 form a 1.0 MHz clock for the successive approximation A - D IC.54.
This clock only runs during a conversion, i.e., when looking for a trigger to be present.

Each conversion takes 10 μs (i.e., 10 clock cycles). The trigger input channels are
converted every 7 ms and the control knobs every 50 ms. At the end of each conversion,
the EOC (Pin.1) IC.54 goes high and the 8031 retrieves the value from the data buss.

When the computer detects a change in level at a trigger input (i.e., a drum has been
struck), it sends the relevant channel a trigger signal via the relevant D - A channel.
(the trigger value may be 'scaled' dependant upon the drum and dynamic) and then discharge
the input sample and hold by opening the appropriate de-trigger channel in IC.19. This
grounds the input S and H capacitor so that a new trigger can be detected.

If the channel detected is a snare or rim, the 8031 sends a counter re-set signal (high
pulse) via its reset snare (Pin.14) or re-set rim (Pin.15) to re-set the relevant prom

ositive going spikes are amplified and used to charge C.59 via D.31. This charge is uffered and sent to the A - D multiplex IC.50 and is detected as a trigger at any point ver the forward bias voltage of D.31.

SELECT INPUT
S+H DISCHARGE
IC19

/6

TRIG.

CH1 — S+H IC6

CH2 — S+H IC14

CH3 — S+H IC14

CH4 — S+H IC15

CH5 — S+H IC15

CH6 — S+H. IC16

IC50 MUX

IC54 A→D

RV1

FUNC. VALUES

RV7

IC64-68
7·5 TL084
IC7-13, IC35

COMPUTER
IC46
IC45
IC47
IC48

SCALE INCOMING TRIGS
GENERATE OUTGOING TRIGS
GENERATE VOICE CV.S
OPERATIONAL FUNCTIONS
DISPLAYS. MIDI. TAPE.
MEMORY. SELF TESTS.

D→A
IC60

DISPLAYS
MIDI OUT
TAPE IN/OUT
MIDI IN

IC5

ENV CH3 IC6
ENV CH4 IC4
ENV CH5 IC4
ENV CH6 IC5

33 CONT VOLT S+H

33 VOICE CONTROLS

BASS S+H IC35
BASS FILT IC35

BASS FILT+OP EQ. IC17

ON/OFF

2ND SIGN OSC
IC2

NOISE GEN
IC18

SNARE
RIM
TOM1
TOM2
TOM3

AUDIO OUTS + M

IF IN DOUBT PLEASE ASK

THIRD ANGLE PROJECTION

SDS9 COMPUTOR
SIMMONS ELECTRONICS LTD
ALBAN PARK, ST. ALBANS
DWN BY D. SIMMONS 30-11-84
DWG 3/3 REVISED 5/2/85
RE-DRAWN 5/8/87 PSB

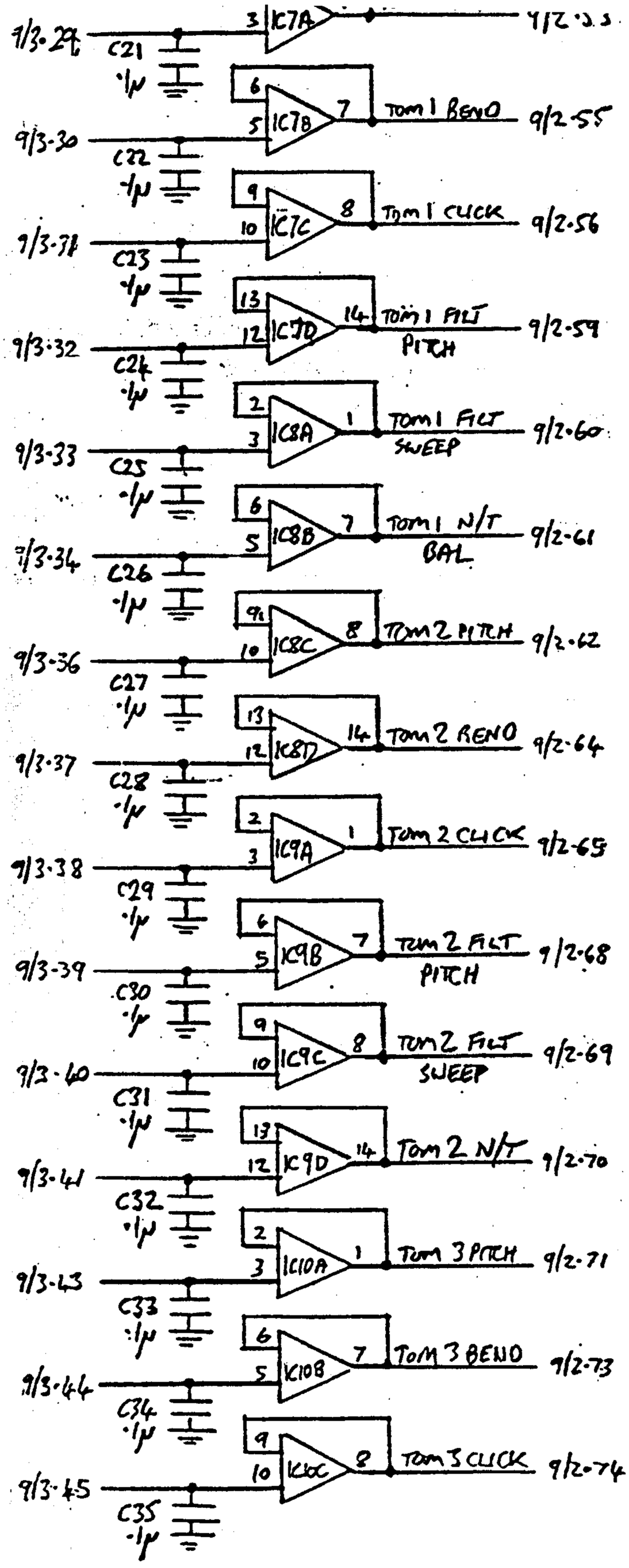
9/3-29
C21 ·1μ
IC7A
9/2-53
9/3-30
C22 ·1μ
IC7B
TOM 1 BEND
9/2-55
9/3-31
C23 ·1μ
IC7C
TOM 1 CLICK
9/2-56
9/3-32
C24 ·1μ
IC7D
TOM 1 FILT PITCH
9/2-59
9/3-33
C25 ·1μ
IC8A
TOM 1 FILT SWEEP
9/2-60
9/3-34
C26 ·1μ
IC8B
TOM 1 N/T BAL
9/2-61
9/3-36
C27 ·1μ
IC8C
TOM 2 PITCH
9/2-62
9/3-37
C28 ·1μ
IC8D
TOM 2 BEND
9/2-64
9/3-38
C29 ·1μ
IC9A
TOM 2 CLICK
9/2-65
9/3-39
C30 ·1μ
IC9B
TOM 2 FILT PITCH
9/2-68
9/3-40
C31 ·1μ
IC9C
TOM 2 FILT SWEEP
9/2-69
9/3-41
C32 ·1μ
IC9D
TOM 2 N/T
9/2-70
9/3-43
C33 ·1μ
IC10A
TOM 3 PITCH
9/2-71
9/3-44
C34 ·1μ
IC10B
TOM 3 BEND
9/2-73
9/3-45
C35 ·1μ
IC10C
TOM 3 CLICK
9/2-74
9/3-46
C36 ·1μ
PITCH
9/3-47
C37 ·1μ
IC11A
TOM 3 FILTER SWEEP
9/2-78
9/3-48
C38 ·1μ
IC11B
TOM 3 N/T
9/2-79
9/3-17
C39 ·1μ
IC11C
SNARE PITCH
9/2-80
9/3-18
C40 ·1μ
IC11D
SNARE BEND
9/2-82
9/3-24
C41 ·1μ
IC12A
RIM PITCH
9/2-83
9/3-25
C42 ·1μ
IC12B
RIM BEND
9/2-85
9/3-26
C43 ·1μ
IC12C
B/C SELECT
9/2-86
9/3-28
C44 ·1μ
IC12D
RIM NOISE
9/2-87
9/3-19
C45 ·1μ
IC13A
SNARE FILTER PITCH
9/2-88
9/3-20
C46 ·1μ
IC13B
SNARE FILTER SWEEP
9/2-89
9/3-22
C47 ·1μ
IC13C
SNARE RIM BALANCE
9/2-90
9/3-21
C48 ·1μ
IC13D
SNARE RESONANCE
9/2-91
9/3-16
C186 ·1μ
IC35
BASS AUDIO
9/2-16
9/3-10
C187 ·1μ
IC35
BASS SWITCH
9/2-10

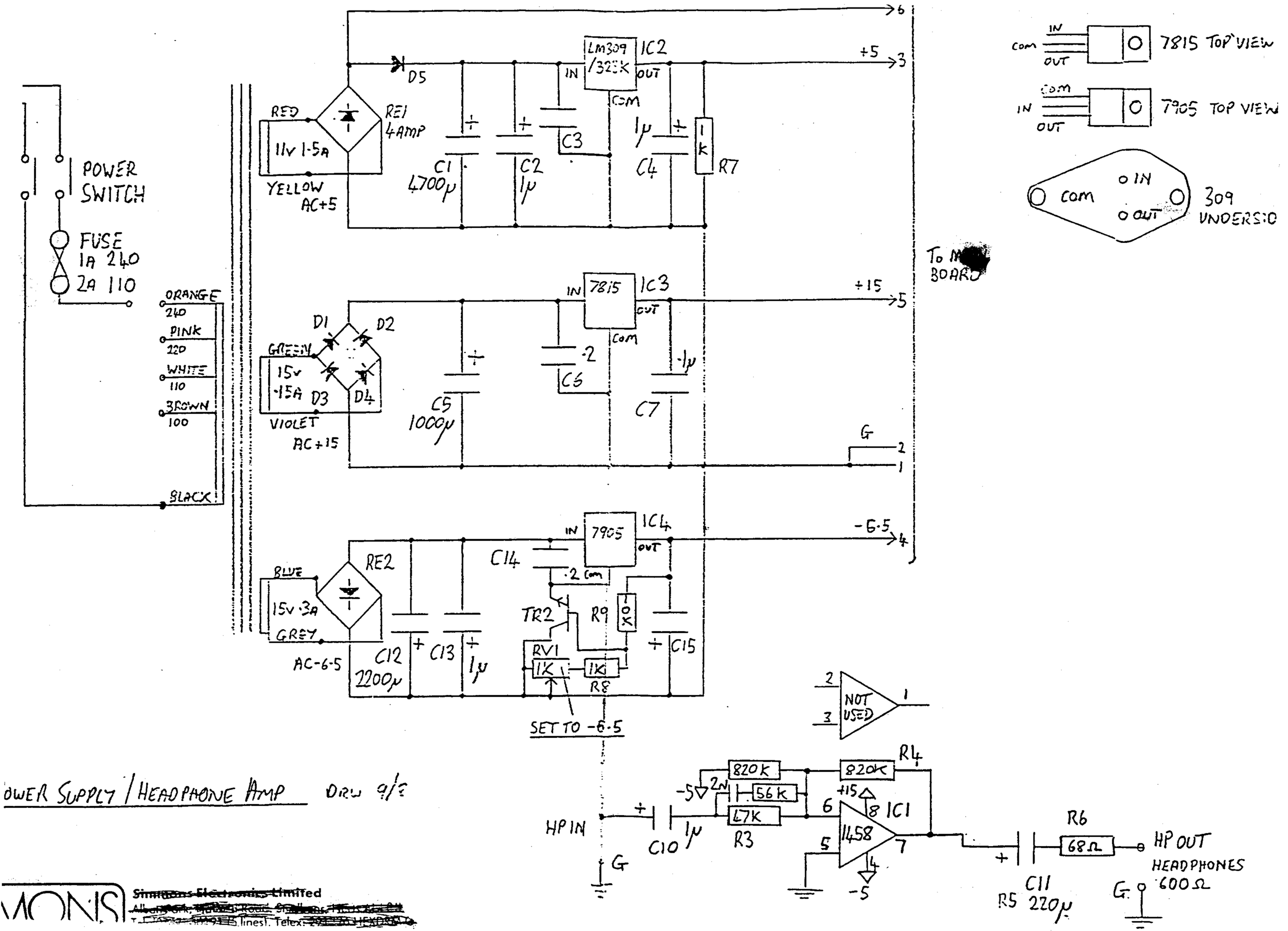

OWER SUPPLY / HEADPHONE AMP DRW 9/8

MONS Simmons Electronics Limited

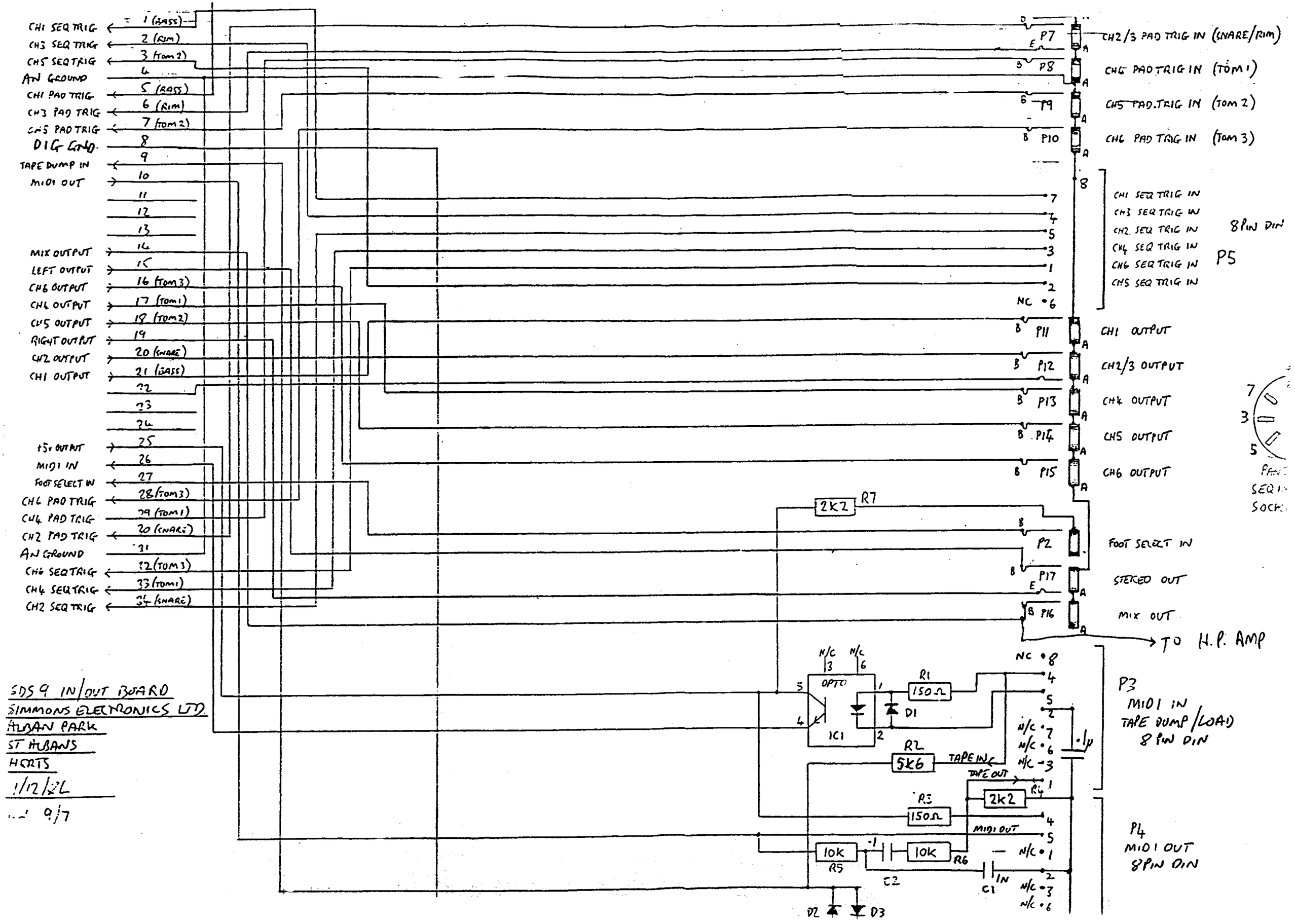
CH1 SEQ TRIG
CH3 SEQ TRIG
CH5 SEQ TRIG
AN GROUND
CH1 PAD TRIG
CH3 PAD TRIG
CH5 PAD TRIG
DIG GND
TAPE DUMP IN
MIDI OUT
MIX OUTPUT
LEFT OUTPUT
CH6 OUTPUT
CH4 OUTPUT
CH5 OUTPUT
RIGHT OUTPUT
CH2 OUTPUT
CH1 OUTPUT
+5v OUTPUT
MIDI IN
FOOT SELECT IN
CH6 PAD TRIG
CH4 PAD TRIG
CH2 PAD TRIG
AN GROUND
CH6 SEQ TRIG
CH4 SEQ TRIG
CH2 SEQ TRIG
1 (BASS)
2 (RIM)
3 (TOM 2)
4
5 (BASS)
6 (RIM)
7 (TOM 2)
8
9
10
11
12
13
14
15
16 (TOM 3)
17 (TOM 1)
18 (TOM 2)
19
20 (SNARE)
21 (BASS)
22
23
24
25
26
27
28 (TOM 3)
29 (TOM 1)
30 (SNARE)
31
32 (TOM 3)
33 (TOM 1)
34 (SNARE)
P7
CH2/3 PAD TRIG IN (SNARE/RIM)
P8
CH6 PAD TRIG IN (TOM 1)
P9
CH5 PAD TRIG IN (TOM 2)
P10
CH6 PAD TRIG IN (TOM 3)
CH1 SEQ TRIG IN
CH3 SEQ TRIG IN
CH2 SEQ TRIG IN
CH4 SEQ TRIG IN
CH6 SEQ TRIG IN
CH5 SEQ TRIG IN
8 PIN DIN
P5
P11
CH1 OUTPUT
P12
CH2/3 OUTPUT
P13
CH4 OUTPUT
P14
CH5 OUTPUT
P15
CH6 OUTPUT
2K2
R7
P2
FOOT SELECT IN
P17
STEREO OUT
P16
MIX OUT
TO H.P. AMP
OPTO
IC1
R1
150Ω
D1
R2
5K6
TAPE IN
TAPE OUT
R4
2K2
R3
150Ω
MIDI OUT
10K
R5
10K
R6
C2
C1
1N
D2
D3
P3
MIDI IN
TAPE DUMP/LOAD
8 PIN DIN
P4
MIDI OUT
8 PIN DIN
SDS 9 IN/OUT BOARD
SIMMONS ELECTRONICS LTD
ALBAN PARK
ST ALBANS
HERTS
1/12/82
9/7

IF IN DOUBT PLEASE ASK

THIRD ANGLE PROJECTION

SIMMONS ELECTRONICS LTD
ALBAN PACK
ST. ALBANS
HERTS
DWG - SDS5 5 CHANNEL DRUM KIT
DWN BY D.SIMMONS 25/10/84
VOICE GENERATION
DRAWING 9/2 REVISED 5/2/85
TRACED PSB 10/5/87

Tom 1 (CH1) / Tom 2 (S) / Tom 3 (4)

Tom 2 (CH5)

Tom 3 (CH6)

TRIGGER OUT — To 9/1-33

TRIGGER OUT — To 9/1-34

FROM 9/1-63 PROM B/C PITCH — R96 33K

FROM 9/1-62 PROM A PITCH — R95 33K

FROM 9/1-61 PROM A ENV — R94 33K

FROM 9/1-52 — R97 56K — BC212 TR1

R98 100K — PROM A SOUND CONTROL

SOUND AMOUNT (PROM A) — LM13600 IC20H

R93 33K — FREQ BIAS

R92 10K — R201 1K

R99 1K — R200 68K

R206 56K

ENV IN (PROM B/C) — R210 33K

R204 56K — BC212 TR2

R205 100K — PROM B/C SOUND CONTROL

R203 10K — R209 1K

R207 1K — R208 68K

FREQ BIAS R202 33K

R217 150K — ½ TL084 — IC21A MAIN SNARE CLOCK (PROM A)

R214 150K — R215 68K — R216 68K

IC21B — R218 68K — R219 10K — BC182 TR3

R224 150K — ¼ TL084 — IC21C RIM SHOT X-STICK CLOCK (PROM B+C)

R221 150K — R222 68K — R223 68K

IC21D — R225 68K — R226 10K — BC182 TR4

FROM 9/1-56 HIGH/LOW — PROM B-C SELECT — DT11 — DT12 — 16 S1 5 — STOP CLOCK

IC23 4024 — IC24 4040 — IC25 ZIFS A (MAIN SNARE) B-16K

IC26 DATA IN — 0800 D→A — OUT — XIN

R227 3K9 — SNARE ENV

HIT — FROM 9/1-51 — RESET SNARE

HIT — FROM 9/1-52 — RESET RIM

7400

TL084

IC27 4024 — IC28 4040 — IC29 RIM A ZIFS B 2nd SNARE (RIMSHOT) B-16K — IC30 RIM B ZIFS C (XSTICK) B-16K

DT13 — DT14 — STOP CLOCK — D24 ZIF B=ON — FROM 9/1-67

S2 — S3 — D48

R230 5K6 — R231 3K9 — C72 4pF — C73 4pF — C74 4pF

R232 2K2 — R233 2K2 — R234 2K2

R235 1K — R236 1K — R237 1K

IC31 DATA IN — 0800 D→A — OUT — XIN

R238 3K9 — R239 1K — R240 22K

IC32A — ½ LM13600 — R242 100R — R244 1K — R245 1K — R246 100R — R247 1K

SNARE NOISE AMT 0-5V CON — FROM 9/1-51 — R243 5K6 — BC212 TR5

R248 150K — R249 22K

IC34A — ½ TL084 — R250 68K — R251 100K — R252 100K

IC34B — ½ TL084 — IC34 CURTIS 3372 (18 PIN) (3" PITCH)

INA (RIM) — INB (SNARE) — CON A — CON B — VCF OUT — VCA IN — RES IN — RES VCA CON — FILT FREQ

C75 .1µF — C76 330pF — C77 .033 — C80 .033 — C81 .033 — R253 1K

R254 22K — R255 22K — R256 68K — ½ TL084 — IC34B — To 9/1-95

R257 10K — R258 22K — C82 4µ7 — C83 4µ7

R259 1K

R260 22K — R261 100K — IC32B FILT FREQ SWEEP — ½ LM13600 — R265 33K — R264 1K — BC212 TR6

R262 — R263

R266 3K3

R267 1K — R268 1K — R269 100R — R270 1K — R271 1K — R272 1K — R273 1K — R274 120K

R275 1K — R276 1K — R277 1K — R278 1K — R279 1K — R280 1K — R281 1K — R282 1K — R283 1K — R284 1K — R285 1K — R286 1K — R287 1K — R288 1K — R289 1K — R290 1K — R291 1K — R292 1K — R293 1K — R294 1K — R295 1K — R296 1K — R297 1K — R298 1K — R299 1K — R300 1K — R301 1K — R302 1K — R303 1K — R304 1K — R305 1K — R306 1K — R307 1K — R308 1K — R309 1K — R310 1K — R311 1K — R312 1K — R313 1K — R314 1K — R315 1K — R316 1K — R317 1K — R318 1K — R319 1K — R320 1K — R321 1K — R322 1K — R323 1K — R324 1K — R325 1K — R326 1K — R327 1K — R328 1K — R329 1K — R330 1K — R331 1K — R332 1K — R333 1K — R334 1K — R335 1K — R336 1K — R337 1K — R338 1K — R339 1K — R340 1K — R341 1K — R342 1K — R343 1K — R344 1K — R345 1K — R346 1K — R347 1K — R348 1K — R349 1K — R350 1K — R351 1K — R352 1K — R353 1K — R354 1K — R355 1K — R356 1K — R357 1K — R358 1K — R359 1K — R360 1K — R361 1K — R362 1K — R363 1K — R364 1K — R365 1K — R366 1K — R367 1K — R368 1K — R369 1K — R370 1K — R371 1K — R372 1K — R373 1K — R374 1K — R375 1K — R376 1K — R377 1K — R378 1K — R379 1K — R380 1K — R381 1K — R382 1K — R383 1K — R384 1K — R385 1K — R386 1K — R387 1K — R388 1K — R389 1K — R390 1K — R391 1K — R392 1K — R393 1K — R394 1K — R395 1K — R396 1K — R397 1K — R398 1K — R399 1K — R400 1K — R401 1K — R402 1K — R403 1K — R404 1K — R405 1K — R406 1K — R407 1K — R408 1K — R409 1K — R410 1K — R411 1K — R412 1K — R413 1K — R414 1K — R415 1K — R416 1K — R417 1K — R418 1K — R419 1K — R420 1K — R421 1K — R422 1K — R423 1K — R424 1K — R425 1K — R426 1K — R427 1K — R428 1K — R429 1K — R430 1K — R431 1K — R432 1K — R433 1K — R434 1K — R435 1K — R436 1K — R437 1K — R438 1K — R439 1K — R440 1K — R441 1K — R442 1K — R443 1K — R444 1K — R445 1K — R446 1K — R447 1K — R448 1K — R449 1K — R450 1K — R451 1K — R452 1K — R453 1K — R454 1K — R455 1K — R456 1K — R457 1K — R458 1K — R459 1K — R460 1K — R461 1K — R462 1K — R463 1K — R464 1K — R465 1K — R466 1K — R467 1K — R468 1K — R469 1K — R470 1K — R471 1K — R472 1K — R473 1K — R474 1K — R475 1K — R476 1K — R477 1K — R478 1K — R479 1K — R480 1K — R481 1K — R482 1K — R483 1K — R484 1K — R485 1K — R486 1K — R487 1K — R488 1K — R489 1K — R490 1K — R491 1K — R492 1K — R493 1K — R494 1K — R495 1K — R496 1K — R497 1K — R498 1K — R499 1K — R500 1K — R501 1K — R502 1K — R503 1K — R504 1K — R505 1K — R506 1K — R507 1K — R508 1K — R509 1K — R510 1K — R511 1K — R512 1K — R513 1K — R514 1K — R515 1K — R516 1K — R517 1K — R518 1K — R519 1K — R520 1K — R521 1K — R522 1K — R523 1K — R524 1K — R525 1K — R526 1K — R527 1K — R528 1K — R529 1K — R530 1K — R531 1K — R532 1K — R533 1K — R534 1K — R535 1K — R536 1K — R537 1K — R538 1K — R539 1K — R540 1K — R541 1K — R542 1K — R543 1K — R544 1K — R545 1K — R546 1K — R547 1K — R548 1K — R549 1K — R550 1K — R551 1K — R552 1K — R553 1K — R554 1K — R555 1K — R556 1K — R557 1K — R558 1K — R559 1K — R560 1K — R561 1K — R562 1K — R563 1K — R564 1K — R565 1K — R566 1K — R567 1K — R568 1K — R569 1K — R570 1K — R571 1K — R572 1K — R573 1K — R574 1K — R575 1K — R576 1K — R577 1K — R578 1K — R579 1K — R580 1K — R581 1K — R582 1K — R583 1K — R584 1K — R585 1K — R586 1K — R587 1K — R588 1K — R589 1K — R590 1K — R591 1K — R592 1K — R593 1K — R594 1K — R595 1K — R596 1K — R597 1K — R598 1K — R599 1K — R600 1K — R601 1K — R602 1K — R603 1K — R604 1K — R605 1K — R606 1K — R607 1K — R608 1K — R609 1K — R610 1K — R611 1K — R612 1K — R613 1K — R614 1K — R615 1K — R616 1K — R617 1K — R618 1K — R619 1K — R620 1K — R621 1K — R622 1K — R623 1K — R624 1K — R625 1K — R626 1K — R627 1K — R628 1K — R629 1K — R630 1K — R631 1K — R632 1K — R633 1K — R634 1K — R635 1K — R636 1K — R637 1K — R638 1K — R639 1K — R640 1K — R641 1K — R642 1K — R643 1K — R644 1K — R645 1K — R646 1K — R647 1K — R648 1K — R649 1K — R650 1K — R651 1K — R652 1K — R653 1K — R654 1K — R655 1K — R656 1K — R657 1K — R658 1K — R659 1K — R660 1K — R661 1K — R662 1K — R663 1K — R664 1K — R665 1K — R666 1K — R667 1K — R668 1K — R669 1K — R670 1K — R671 1K — R672 1K — R673 1K — R674 1K — R675 1K — R676 1K — R677 1K — R678 1K — R679 1K — R680 1K — R681 1K — R682 1K — R683 1K — R684 1K — R685 1K — R686 1K — R687 1K — R688 1K — R689 1K — R690 1K — R691 1K — R692 1K — R693 1K — R694 1K — R695 1K — R696 1K — R697 1K — R698 1K — R699 1K — R700 1K — R701 1K — R702 1K — R703 1K — R704 1K — R705 1K — R706 1K — R707 1K — R708 1K — R709 1K — R710 1K — R711 1K — R712 1K — R713 1K — R714 1K — R715 1K — R716 1K — R717 1K — R718 1K — R719 1K — R720 1K — R721 1K — R722 1K — R723 1K — R724 1K — R725 1K — R726 1K — R727 1K — R728 1K — R729 1K — R730 1K — R731 1K — R732 1K — R733 1K — R734 1K — R735 1K — R736 1K — R737 1K — R738 1K — R739 1K — R740 1K — R741 1K — R742 1K — R743 1K — R744 1K — R745 1K — R746 1K — R747 1K — R748 1K — R749 1K — R750 1K — R751 1K — R752 1K — R753 1K — R754 1K — R755 1K — R756 1K — R757 1K — R758 1K — R759 1K — R760 1K — R761 1K — R762 1K — R763 1K — R764 1K — R765 1K — R766 1K — R767 1K — R768 1K — R769 1K — R770 1K — R771 1K — R772 1K — R773 1K — R774 1K — R775 1K — R776 1K — R777 1K — R778 1K — R779 1K — R780 1K — R781 1K — R782 1K — R783 1K — R784 1K — R785 1K — R786 1K — R787 1K — R788 1K — R789 1K — R790 1K — R791 1K — R792 1K — R793 1K — R794 1K — R795 1K — R796 1K — R797 1K — R798 1K — R799 1K — R800 1K — R801 1K — R802 1K — R803 1K — R804 1K — R805 1K — R806 1K — R807 1K — R808 1K — R809 1K — R810 1K — R811 1K — R812 1K — R813 1K — R814 1K — R815 1K — R816 1K — R817 1K — R818 1K — R819 1K — R820 1K — R821 1K — R822 1K — R823 1K — R824 1K — R825 1K — R826 1K — R827 1K — R828 1K — R829 1K — R830 1K — R831 1K — R832 1K — R833 1K — R834 1K — R835 1K — R836 1K — R837 1K — R838 1K — R839 1K — R840 1K — R841 1K — R842 1K — R843 1K — R844 1K — R845 1K — R846 1K — R847 1K — R848 1K — R849 1K — R850 1K — R851 1K — R852 1K — R853 1K — R854 1K — R855 1K — R856 1K — R857 1K — R858 1K — R859 1K — R860 1K — R861 1K — R862 1K — R863 1K — R864 1K — R865 1K — R866 1K — R867 1K — R868 1K — R869 1K — R870 1K — R871 1K — R872 1K — R873 1K — R874 1K — R875 1K — R876 1K — R877 1K — R878 1K — R879 1K — R880 1K — R881 1K — R882 1K — R883 1K — R884 1K — R885 1K — R886 1K — R887 1K — R888 1K — R889 1K — R890 1K — R891 1K — R892 1K — R893 1K — R894 1K — R895 1K — R896 1K — R897 1K — R898 1K — R899 1K — R900 1K — R901 1K — R902 1K — R903 1K — R904 1K — R905 1K — R906 1K — R907 1K — R908 1K — R909 1K — R910 1K — R911 1K — R912 1K — R913 1K — R914 1K — R915 1K — R916 1K — R917 1K — R918 1K — R919 1K — R920 1K — R921 1K — R922 1K — R923 1K — R924 1K — R925 1K — R926 1K — R927 1K — R928 1K — R929 1K — R930 1K — R931 1K — R932 1K — R933 1K — R934 1K — R935 1K — R936 1K — R937 1K — R938 1K — R939 1K — R940 1K — R941 1K — R942 1K — R943 1K — R944 1K — R945 1K — R946 1K — R947 1K — R948 1K — R949 1K — R950 1K — R951 1K — R952 1K — R953 1K — R954 1K — R955 1K — R956 1K — R957 1K — R958 1K — R959 1K — R960 1K — R961 1K — R962 1K — R963 1K — R964 1K — R965 1K — R966 1K — R967 1K — R968 1K — R969 1K — R970 1K — R971 1K — R972 1K — R973 1K — R974 1K — R975 1K — R976 1K — R977 1K — R978 1K — R979 1K — R980 1K — R981 1K — R982 1K — R983 1K — R984 1K — R985 1K — R986 1K — R987 1K — R988 1K — R989 1K — R990 1K — R991 1K — R992 1K — R993 1K — R994 1K — R995 1K — R996 1K — R997 1K — R998 1K — R999 1K — R1000 1K

IC1 — IC2 — IC3 — IC4 — IC5 — IC6 — IC7 — IC8 — IC9 — IC10 — IC11 — IC12 — IC13 — IC14 — IC15 — IC16 — IC17 — IC18 — IC19 — IC20 — IC21 — IC22 — IC23 — IC24 — IC25 — IC26 — IC27 — IC28 — IC29 — IC30 — IC31 — IC32 — IC33 — IC34 — IC35 — IC36 — IC37 — IC38 — IC39 — IC40 — IC41 — IC42 — IC43 — IC44 — IC45 — IC46 — IC47 — IC48 — IC49 — IC50 — IC51 — IC52 — IC53 — IC54 — IC55 — IC56 — IC57 — IC58 — IC59 — IC60 — IC61 — IC62 — IC63 — IC64 — IC65 — IC66 — IC67 — IC68 — IC69 — IC70 — IC71 — IC72 — IC73 — IC74 — IC75 — IC76 — IC77 — IC78 — IC79 — IC80 — IC81 — IC82 — IC83 — IC84 — IC85 — IC86 — IC87 — IC88 — IC89 — IC90 — IC91 — IC92 — IC93 — IC94 — IC95 — IC96 — IC97 — IC98 — IC99 — IC100

C1 — C2 — C3 — C4 — C5 — C6 — C7 — C8 — C9 — C10 — C11 — C12 — C13 — C14 — C15 — C16 — C17 — C18 — C19 — C20 — C21 — C22 — C23 — C24 — C25 — C26 — C27 — C28 — C29 — C30 — C31 — C32 — C33 — C34 — C35 — C36 — C37 — C38 — C39 — C40 — C41 — C42 — C43 — C44 — C45 — C46 — C47 — C48 — C49 — C50 — C51 — C52 — C53 — C54 — C55 — C56 — C57 — C58 — C59 — C60 — C61 — C62 — C63 — C64 — C65 — C66 — C67 — C68 — C69 — C70 — C71 — C72 — C73 — C74 — C75 — C76 — C77 — C78 — C79 — C80 — C81 — C82 — C83 — C84 — C85 — C86 — C87 — C88 — C89 — C90 — C91 — C92 — C93 — C94 — C95 — C96 — C97 — C98 — C99 — C100

D1 — D2 — D3 — D4 — D5 — D6 — D7 — D8 — D9 — D10 — D11 — D12 — D13 — D14 — D15 — D16 — D17 — D18 — D19 — D20 — D21 — D22 — D23 — D24 — D25 — D26 — D27 — D28 — D29 — D30 — D31 — D32 — D33 — D34 — D35 — D36 — D37 — D38 — D39 — D40 — D41 — D42 — D43 — D44 — D45 — D46 — D47 — D48 — D49 — D50 — D51 — D52 — D53 — D54 — D55 — D56 — D57 — D58 — D59 — D60 — D61 — D62 — D63 — D64 — D65 — D66 — D67 — D68 — D69 — D70 — D71 — D72 — D73 — D74 — D75 — D76 — D77 — D78 — D79 — D80 — D81 — D82 — D83 — D84 — D85 — D86 — D87 — D88 — D89 — D90 — D91 — D92 — D93 — D94 — D95 — D96 — D97 — D98 — D99 — D100

TR1 — TR2 — TR3 — TR4 — TR5 — TR6 — TR7 — TR8 — TR9 — TR10 — TR11 — TR12 — TR13 — TR14 — TR15 — TR16 — TR17 — TR18 — TR19 — TR20 — TR21 — TR22 — TR23 — TR24 — TR25 — TR26 — TR27 — TR28 — TR29 — TR30 — TR31 — TR32 — TR33 — TR34 — TR35 — TR36 — TR37 — TR38 — TR39 — TR40 — TR41 — TR42 — TR43 — TR44 — TR45 — TR46 — TR47 — TR48 — TR49 — TR50 — TR51 — TR52 — TR53 — TR54 — TR55 — TR56 — TR57 — TR58 — TR59 — TR60 — TR61 — TR62 — TR63 — TR64 — TR65 — TR66 — TR67 — TR68 — TR69 — TR70 — TR71 — TR72 — TR73 — TR74 — TR75 — TR76 — TR77 — TR78 — TR79 — TR80 — TR81 — TR82 — TR83 — TR84 — TR85 — TR86 — TR87 — TR88 — TR89 — TR90 — TR91 — TR92 — TR93 — TR94 — TR95 — TR96 — TR97 — TR98 — TR99 — TR100

SW1 — SW2 — SW3 — SW4 — SW5 — SW6 — SW7 — SW8 — SW9 — SW10 — SW11 — SW12 — SW13 — SW14 — SW15 — SW16 — SW17 — SW18 — SW19 — SW20 — SW21 — SW22 — SW23 — SW24 — SW25 — SW26 — SW27 — SW28 — SW29 — SW30 — SW31 — SW32 — SW33 — SW34 — SW35 — SW36 — SW37 — SW38 — SW39 — SW40 — SW41 — SW42 — SW43 — SW44 — SW45 — SW46 — SW47 — SW48 — SW49 — SW50 — SW51 — SW52 — SW53 — SW54 — SW55 — SW56 — SW57 — SW58 — SW59 — SW60 — SW61 — SW62 — SW63 — SW64 — SW65 — SW66 — SW67 — SW68 — SW69 — SW70 — SW71 — SW72 — SW73 — SW74 — SW75 — SW76 — SW77 — SW78 — SW79 — SW80 — SW81 — SW82 — SW83 — SW84 — SW85 — SW86 — SW87 — SW88 — SW89 — SW90 — SW91 — SW92 — SW93 — SW94 — SW95 — SW96 — SW97 — SW98 — SW99 — SW

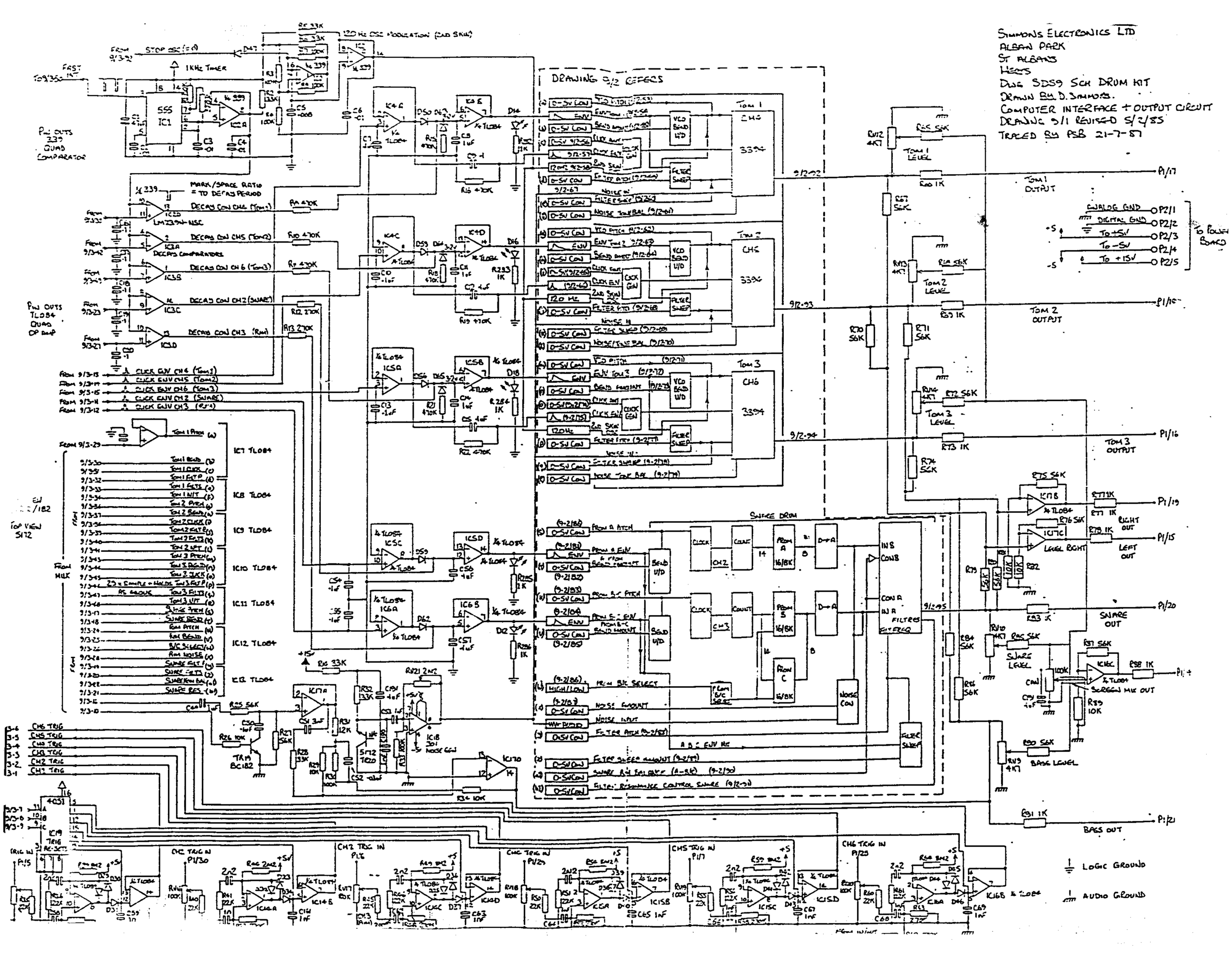
SIMMONS ELECTRONICS LTD
ALBAN PARK
ST ALBANS
HERTS
DWG SDS9 SCH DRUM KIT
DRAWN BY D. SIMMONS.
COMPUTER INTERFACE + OUTPUT CIRCUIT
DRAWING 9/1 REVISED 5/2/85
TRACED BY PSB 21-7-87
DRAWING 9/2 REFERS
120 Hz OSC MODULATION (2ND SKIN)
1KHz TIMER
PIN OUTS 339 QUAD COMPARATOR
MARK/SPACE RATIO = TO DECAY PERIOD
DECAY COMPARATORS
PIN OUTS TL084 QUAD OP AMP
TOP VIEW 5172
FROM MUX
TOM 1 OUTPUT
TOM 2 OUTPUT
TOM 3 OUTPUT
TOM 1 LEVEL
TOM 2 LEVEL
TOM 3 LEVEL
SNARE DRUM
RIGHT OUT
LEFT OUT
LEVEL RIGHT
SNARE OUT
SNARE LEVEL
SCREEN MIX OUT
BASS LEVEL
BASS OUT
ANALOG GND
DIGITAL GND
TO +5V
TO -5V
TO +15V
TO POWER BOARD
LOGIC GROUND
AUDIO GROUND