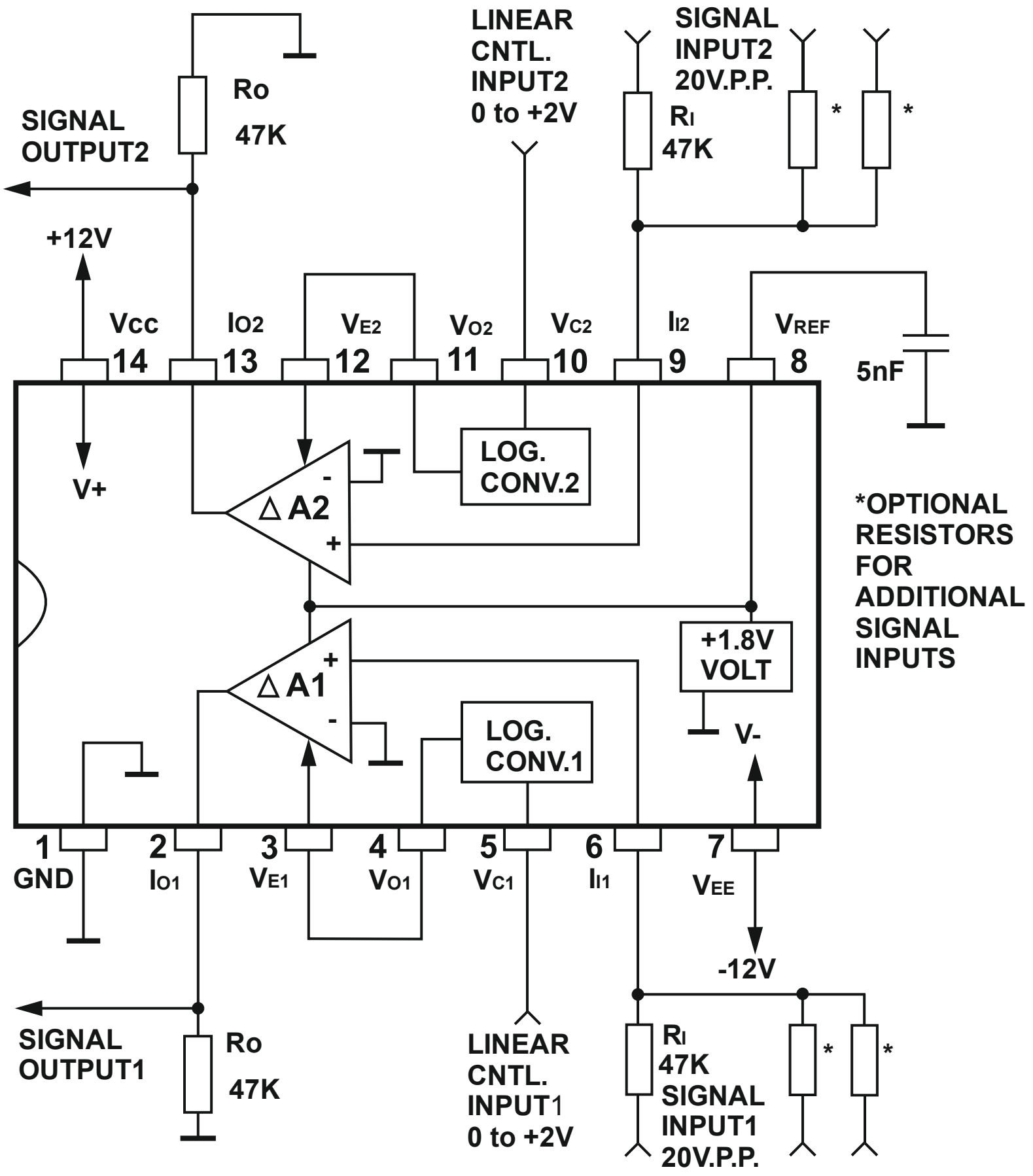Block and Connection Diagram