TL071 2SA1020 2SC1583 2SC2073

Linear VCO with expo Modulation Input (C) J. Haible 1999

(inspired by Korg 700 and MS-20 circuits)

PolyModular (PM) compatible

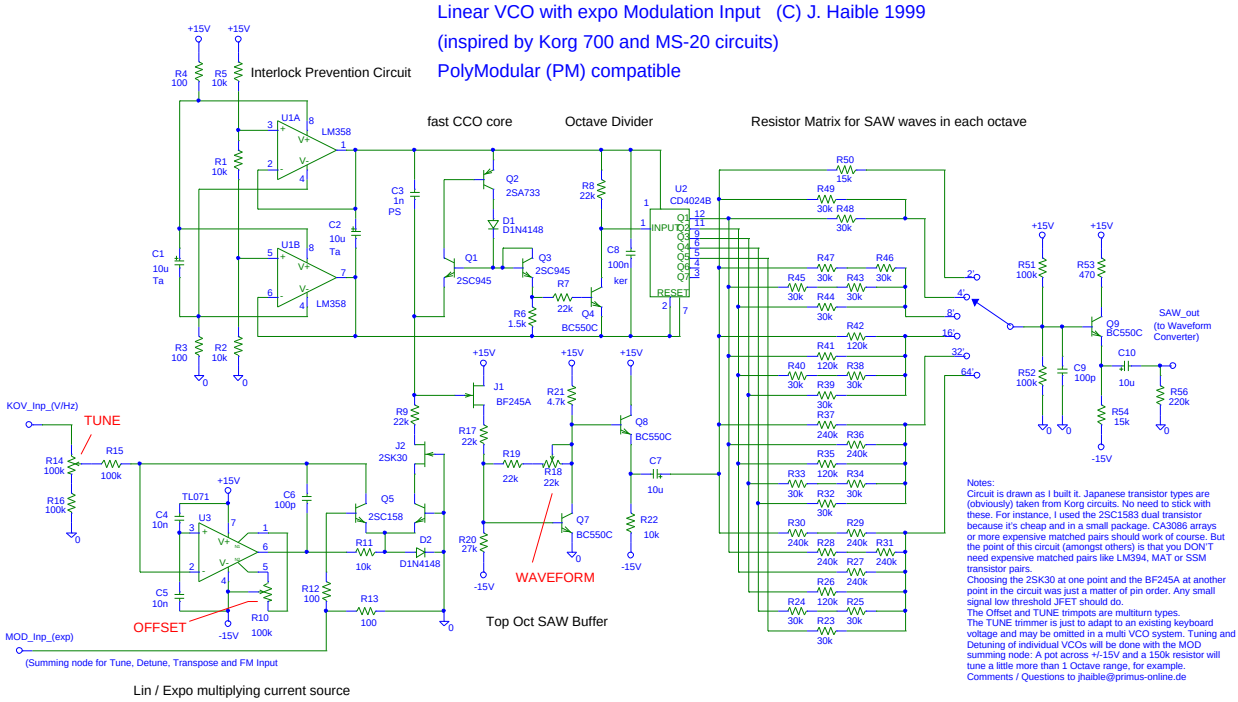

Notes:
Circuit is drawn as I built it. Japanese transistor types are (obviously) taken from Korg circuits. No need to stick with these. For instance, I used the 2SC1583 dual transistor because it's cheap and in a small package. CA3086 arrays or more expensive matched pairs should work of course. But the point of this circuit (amongst others) is that you DON'T need expensive matched pairs like LM394, MAT or SSM transistor pairs.
Choosing the 2SK30 at one point and the BF245A at another point in the circuit was just a matter of pin order. Any small signal low threshold JFET should do.
The Offset and TUNE trimpots are multiturn types.
The TUNE trimmer is just to adapt to an existing keyboard voltage and may be omitted in a multi VCO system. Tuning and Detuning of individual VCOs will be done with the MOD summing node: A pot across +/-15V and a 150k resistor will tune a little more than 1 Octave range, for example.
Comments / Questions to jhaible@primus-online.de